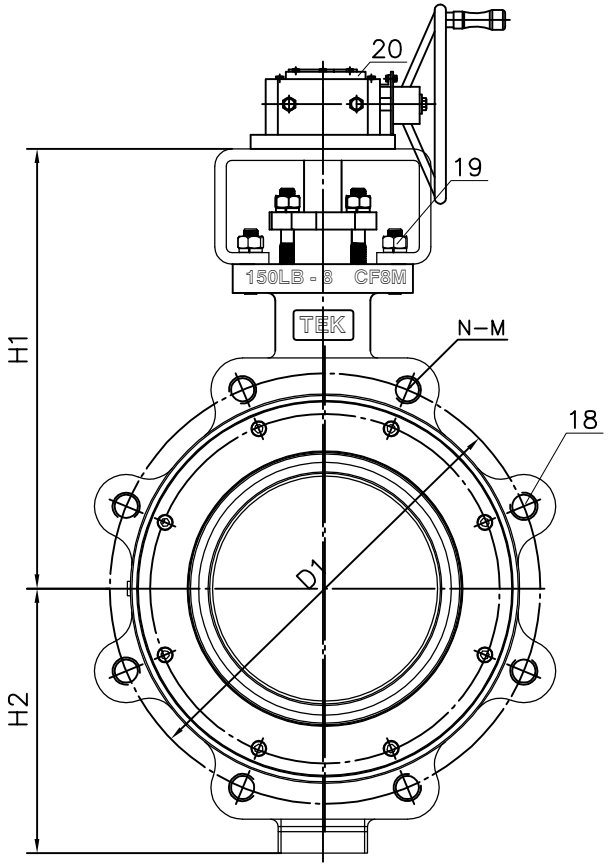

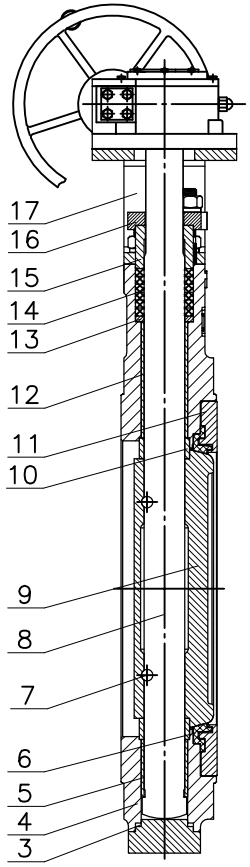

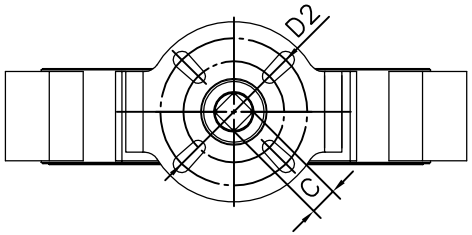

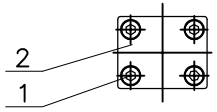

Applicable Standards

1.Design Standard: API 609
2.Face To Face Dimensions: API 609
3.END Flange Dimensions: ANSI B16.5
4.Test Standard: API 598

Property Specification

Nominal Pressure CLASS	150LB	MPa
Hydraulic Shell Test	3.1	
Hydraulic Seat Seal Test	2.2	
Air Seal Test	0.6	
Applicable Temperature	≤180℃	
Applicable Medium	Corrosive Medium	

NO.	PART NAME	MATERIAL
20	Worm Gear	Assembly
19	Bolt	A193 B8
18	Screw	A193 B8M
17	York	SS304
16	Gland Flange	SS304
15	Packing Gland	SS316
14	Packing	PTFE
13	Packing Gasket	SS316
12	Bushing	SS316+PTFE
11	Retainer Flange	SS316
10	Positioning adjustment set	SS316
9	Disc	ASTM A351 CF8M
8	Stem	17–4PH
7	Pin	A182 F316
6	Seat	RPTFE
5	Bushing	SS316+PTFE
4	Body	ASTM A351 CF8M
3	Gasket	SS316+Graphite
2	End Cover	ASTM A182 F316
1	Screw	A193 B8M

mm

SIZE	DN	L	D1	D2	N–M	H1	H2	CXC	TORQUE N.m	TOP FLANGE
6"	150	57	241	102	8–3/4"	250	152	17X17	126	ISO5211 F10
8"	200	64	298.4	102	8–3/4"	280	188	19X19	217	ISO5211 F10

HIGH PERFORMANCE BUTTERFLY VALVE

KOSLAN VALVE

Assembly Drawing

LUG BUTTERFLY VALVE–150LB–6"